Electrolux PROFESSIONAL

Modular Cooking Range Line thermaline 90 - Sink unit on closed base, 1 Side with Backsplash

ITEM #

MODEL #

NAME #

SIS #

AIA #

589466 (MCZAHBD3OO) Sink Unit on Closed Base, one-side operated with backsplash

Short Form Specification

Item No.

Sink unit on closed base, with a large stainless steel tap, constructed according to DIN 18860_2 with 20 mm drop nose top and 70 mm recessed plinth. Internal frame for heavy duty sturdiness in stainless steel. 2 mm top in 1.4301 (AISI 304). Flat surface construction, easily cleanable. THERMODUL connection system enables seamless worktop when units are connected and avoids soil penetrating.
IPX5 water resistant certification.
Configuration: Freestanding, One-side operated with backsplash.

APPROVAL:

Main Features

- Large stainless steel tap.
- All major components may be easily accessed from the front.
- THERMODUL connection system creates a seamless work top when units are connected to each other thus avoiding soil penetrating vital components and facilitating the removal of units in case of replacement or service.

Construction

- IPX5 water resistance certification.
- Fitted on a closed base.
- 2 mm top in 1.4301 (AISI 304).
- Unit constructed according to DIN 18860_2 with 20 mm drop nose top and 70 mm recessed plinth.
- Flat surface construction with minimal hidden areas to easily clean all surfaces
- Internal frame for heavy duty sturdiness in stainless steel.

Modular Cooking Range Line thermaline 90 - Sink unit on closed base, 1 Side with Backsplash

Front

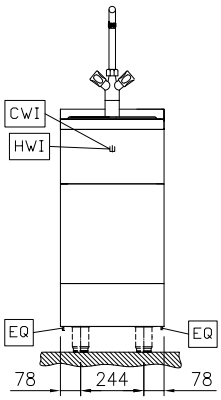

Side

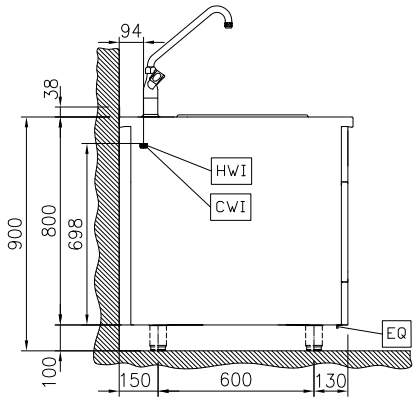

CWI1 = Cold Water inlet 1 (cleaning)
D = Drain
HWI = Hot water inlet

Top

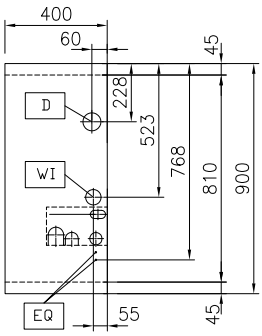

Water:

Inlet water line size:	
589466 (MCZAHBD300)	3/4"
Drain line size:	1"
Incoming Cold/hot Water line size:	3/4"

Key Information:

External dimensions, Width:	400 mm
External dimensions, Depth:	900 mm
External dimensions, Height:	800 mm
Net weight:	38 kg

The company reserves the right to make modifications to the products without prior notice. All information correct at time of printing.

Optional Accessories

- Connecting rail kit for appliances with backsplash, 900mm PNC 912499 ❑
- Portioning shelf, 400mm width PNC 912522 ❑
- Portioning shelf, 400mm width PNC 912552 ❑
- Folding shelf, 300x900mm PNC 912581 ❑
- Folding shelf, 400x900mm PNC 912582 ❑
- Fixed side shelf, 200x900mm PNC 912589 ❑
- Fixed side shelf, 300x900mm PNC 912590 ❑
- Fixed side shelf, 400x900mm PNC 912591 ❑
- Stainless steel front kicking strip, 400mm width PNC 912594 ❑
- Stainless steel side kicking strips left and right, against the wall, 900mm width PNC 912624 ❑
- Stainless steel side kicking strips left and right, back-to-back, 1810mm width PNC 912627 ❑
- Stainless steel plinth, against wall, 400mm width PNC 912897 ❑
- Stainless steel plinth, freestanding, 400mm width PNC 912916 ❑
- Connecting rail kit for appliances with backsplash: modular 90 (on the left) to ProThermetic tilting (on the right), ProThermetic stationary (on the left) to ProThermetic tilting (on the right) PNC 912981 ❑
- Connecting rail kit for appliances with backsplash: modular 90 (on the right) to ProThermetic tilting (on the left), ProThermetic stationary (on the right) to ProThermetic tilting (on the left) PNC 912982 ❑
- Back panel, 400x800mm, for units with backsplash PNC 913022 ❑
- Stainless steel panel, 900x800mm, against wall, left side PNC 913102 ❑
- Stainless steel panel, 900x800mm, against wall, right side PNC 913106 ❑
- Endrail kit, flush-fitting, with backsplash, left PNC 913117 ❑
- Endrail kit, flush-fitting, with backsplash, right PNC 913118 ❑
- Endrail kit (12.5mm) for thermaline 90 units with backsplash, left PNC 913208 ❑
- Endrail kit (12.5mm) for thermaline 90 units with backsplash, right PNC 913209 ❑
- U-clamping rail for back-to-back installations with backsplash PNC 913226 ❑
- Insert profile d=900 PNC 913232 ❑
- Side reinforced panel only in combination with side shelf, for against the wall installations, left PNC 913268 ❑
- Side reinforced panel only in combination with side shelf, for against the wall installations, right PNC 913270 ❑
- Stainless steel dividing panel, 900x800mm, (it should only be used between Electrolux Professional thermaline Modular 90 and thermaline C90) PNC 913673 ❑
- Stainless steel side panel, 900x800mm, flush-fitting (it should only be used against the wall, against a niche and in between Electrolux Professional thermaline and ProThermetic appliances and external appliances - provided that these have at least the same dimensions) PNC 913689 ❑

The company reserves the right to make modifications to the products without prior notice. All information correct at time of printing.